4. Electrical Component Location

A: LOCATION

1. ENGINE

Control module

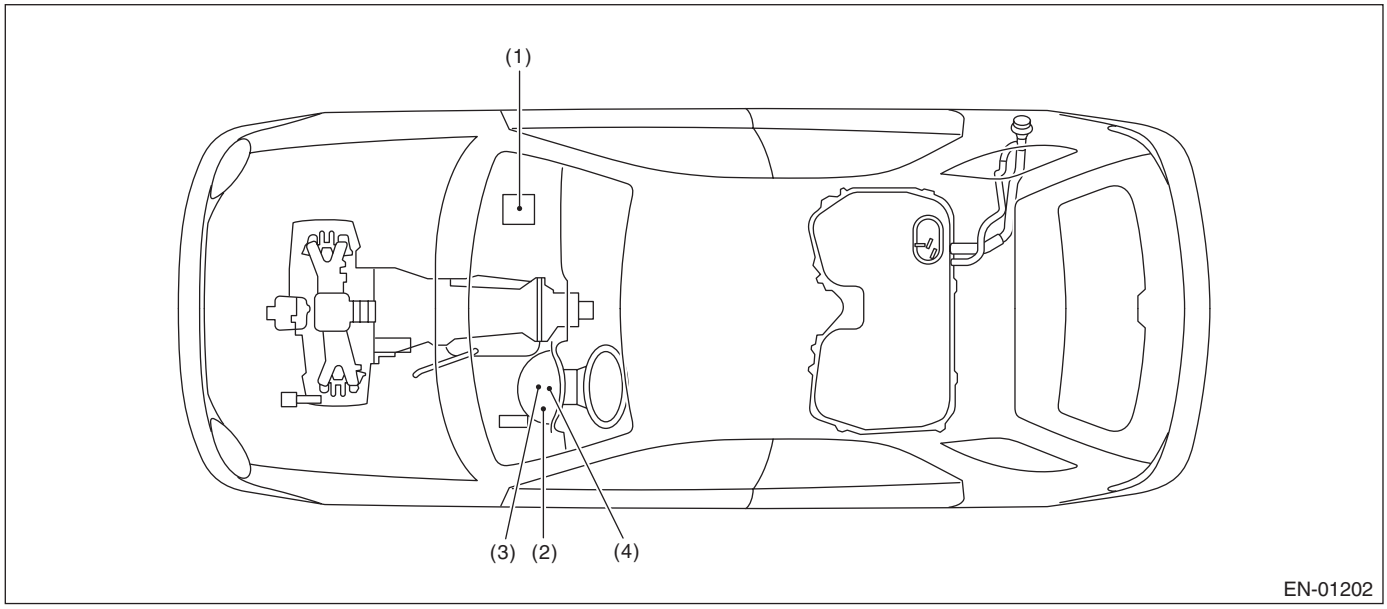

(1) Engine control module (ECM)
(2) Malfunction indicator light
(3) Data link connector
(4) Test mode connector

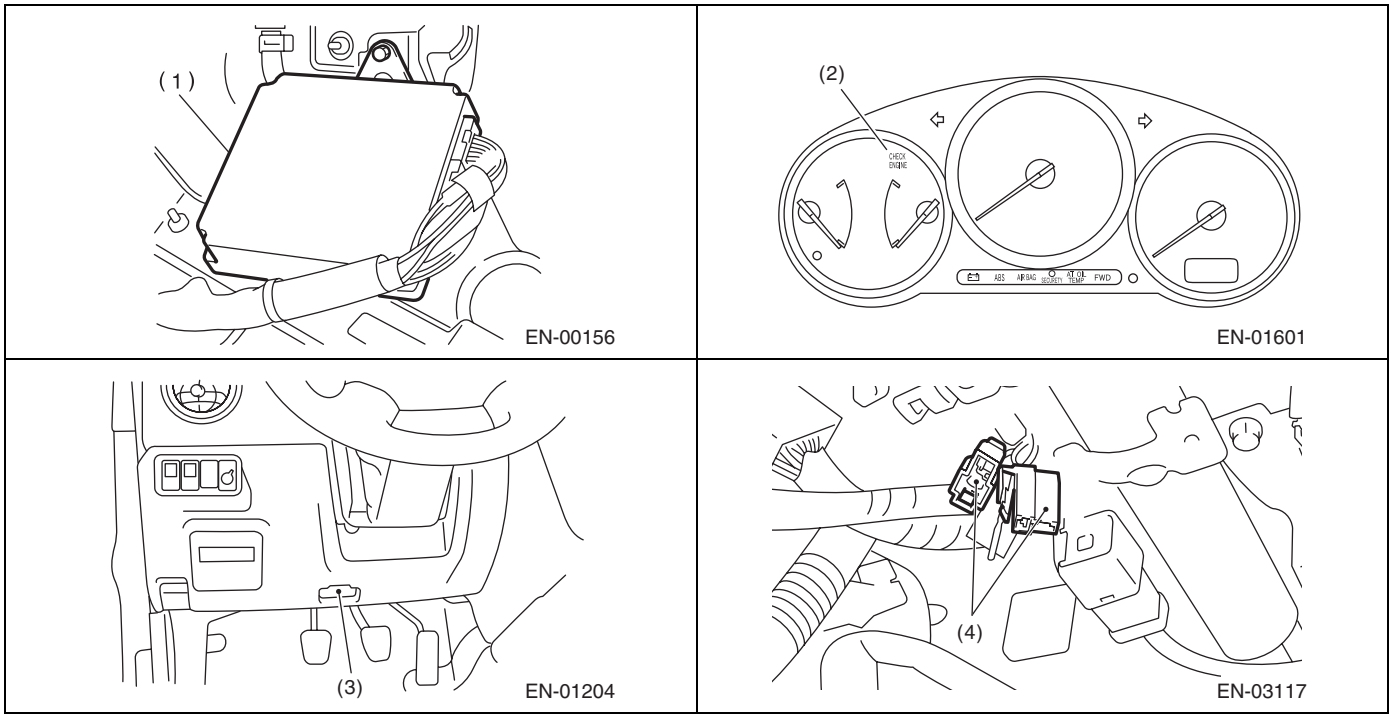

Sensor

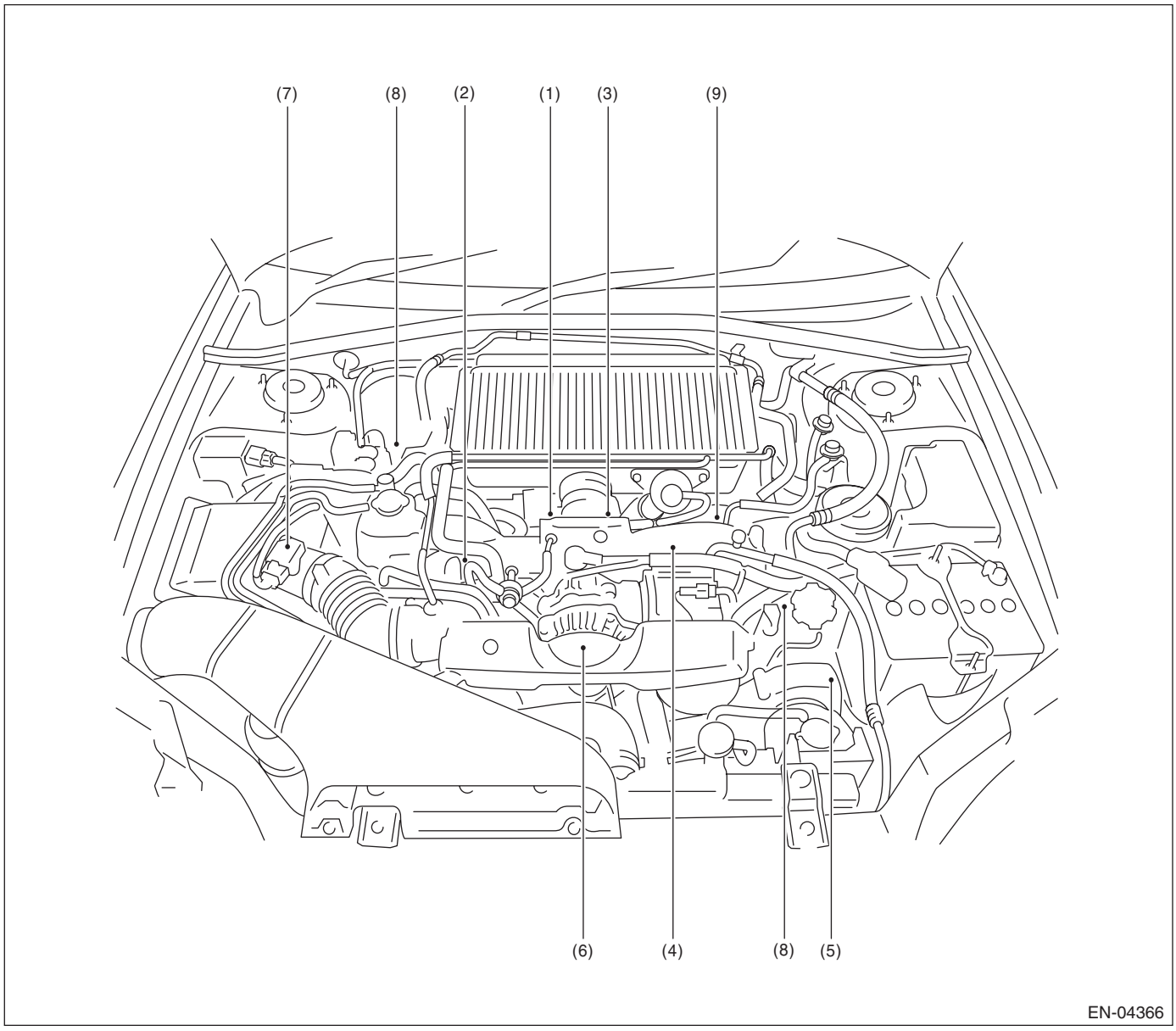

(1) Electronic throttle control
(2) Engine coolant temperature sensor
(3) Manifold absolute pressure sensor
(4) Knock sensor
(5) Camshaft position sensor
(6) Crankshaft position sensor
(7) Mass air flow and intake air temperature sensor
(8) Tumble generator valve position sensor
(9) Secondary air pressure sensor

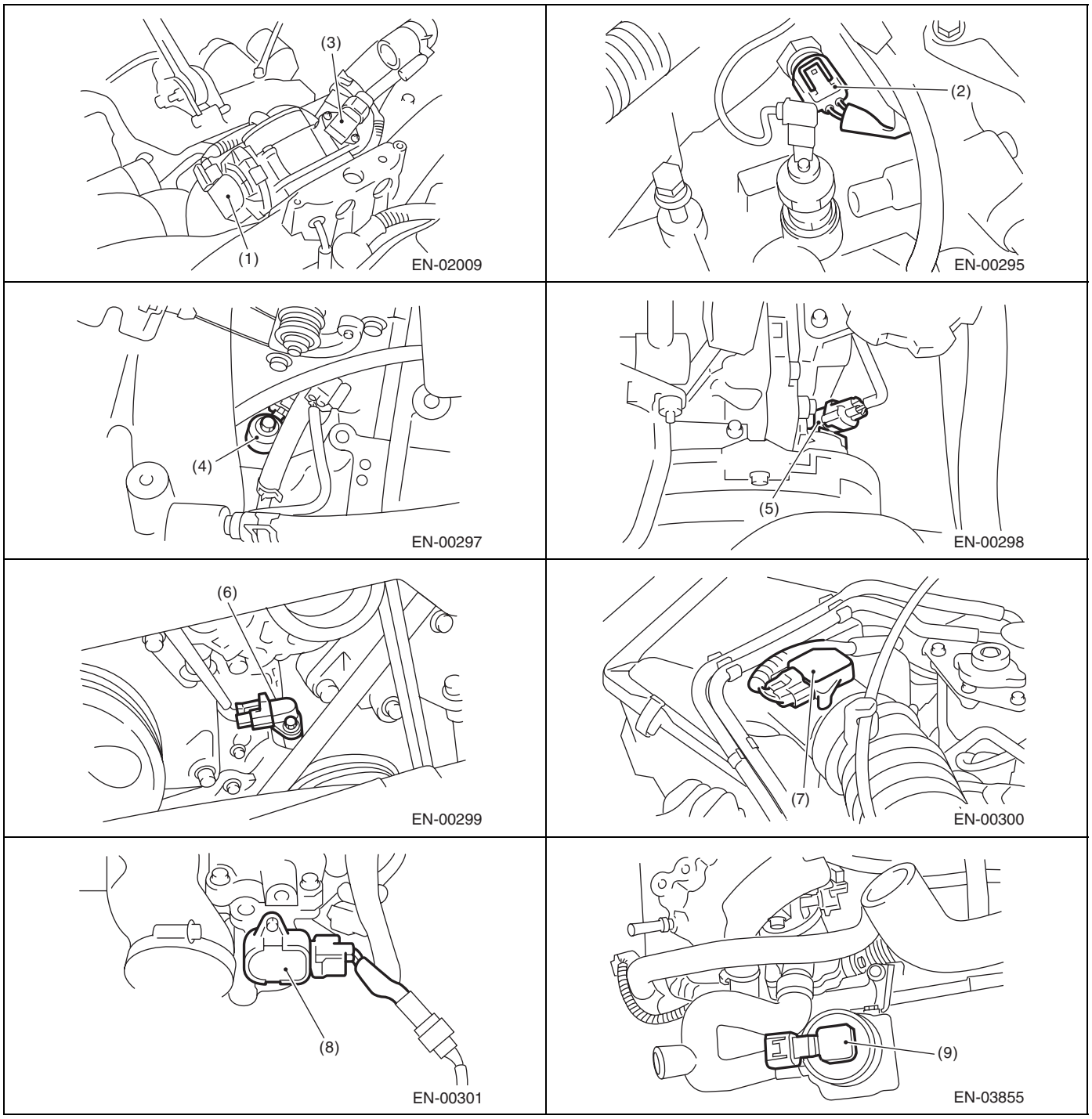
(3)
(1)
EN-02009
(2)
EN-00295
(4)
EN-00297
(5)
EN-00298
(6)
EN-00299
(7)
EN-00300
(8)
EN-00301
(9)
EN-03855

Electrical Component Location

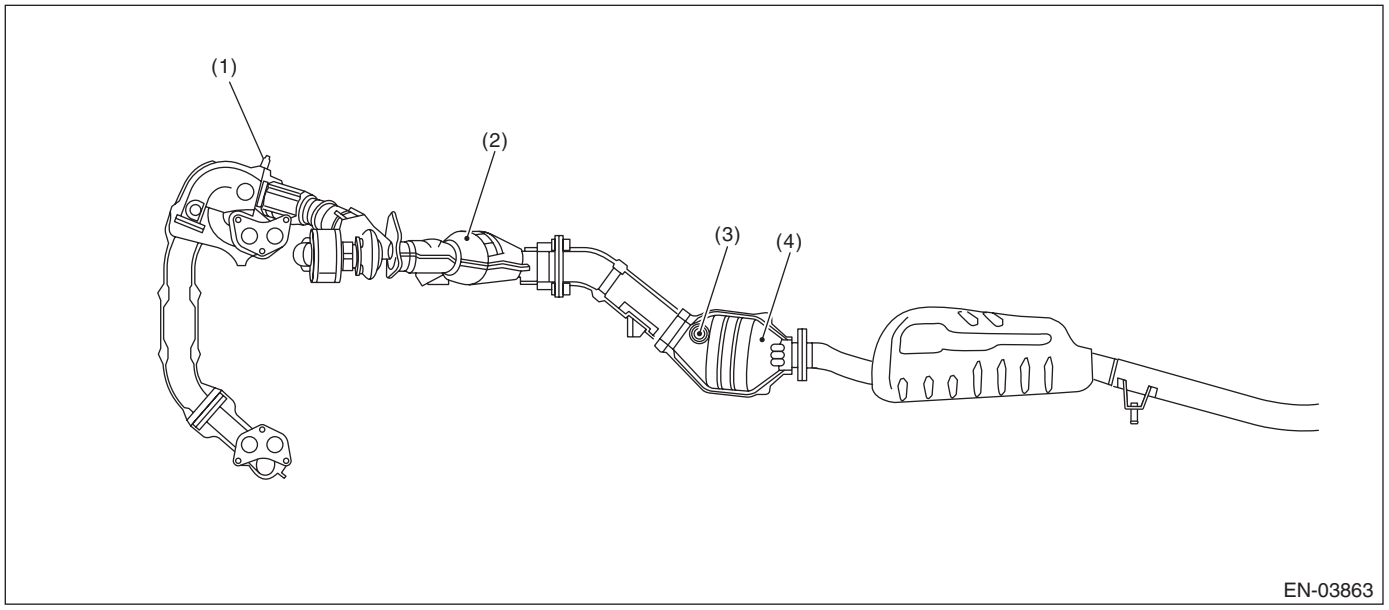

(1) Front oxygen (A/F) sensor
(2) Front catalytic converter
(3) Rear oxygen sensor
(4) Rear catalytic converter

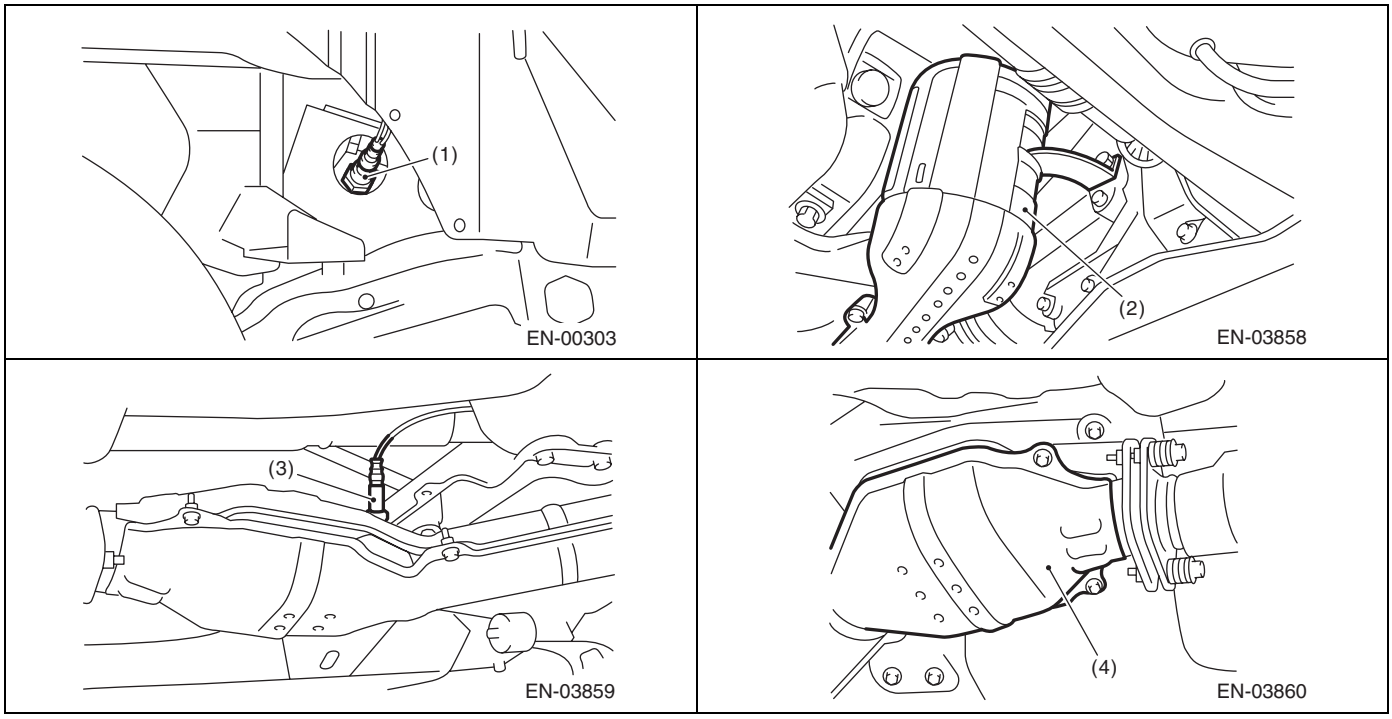

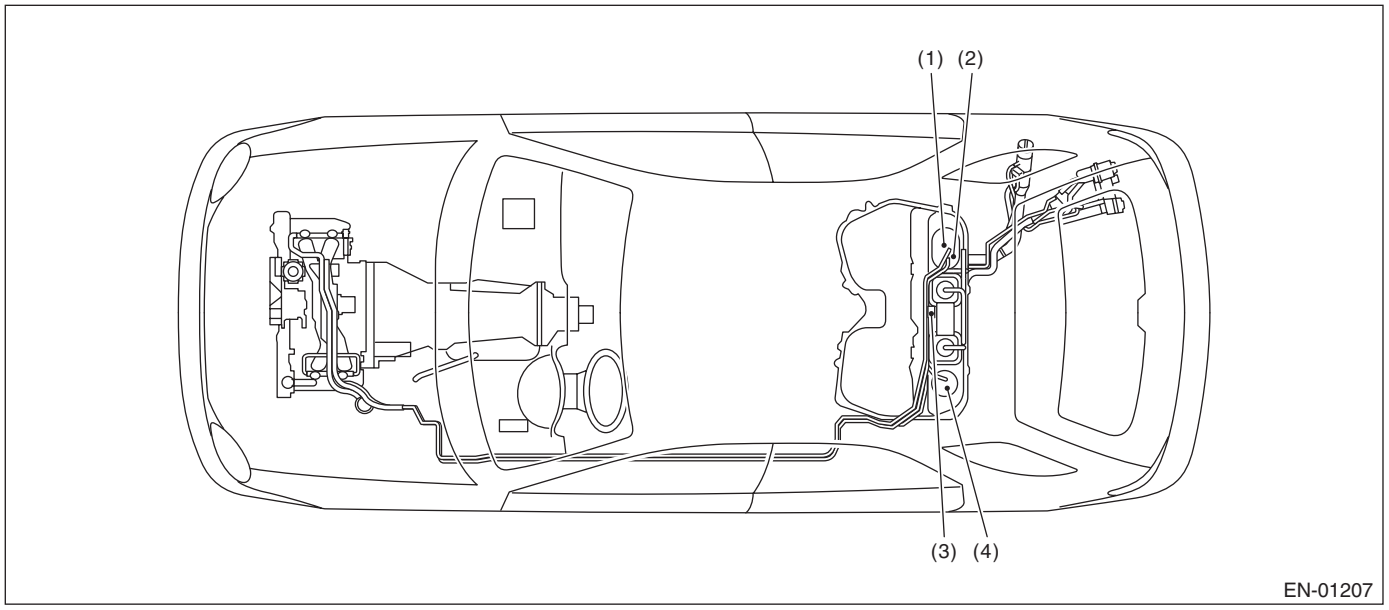

(1) Fuel level sensor
(2) Fuel temperature sensor
(3) Fuel tank pressure sensor
(4) Fuel sub level sensor

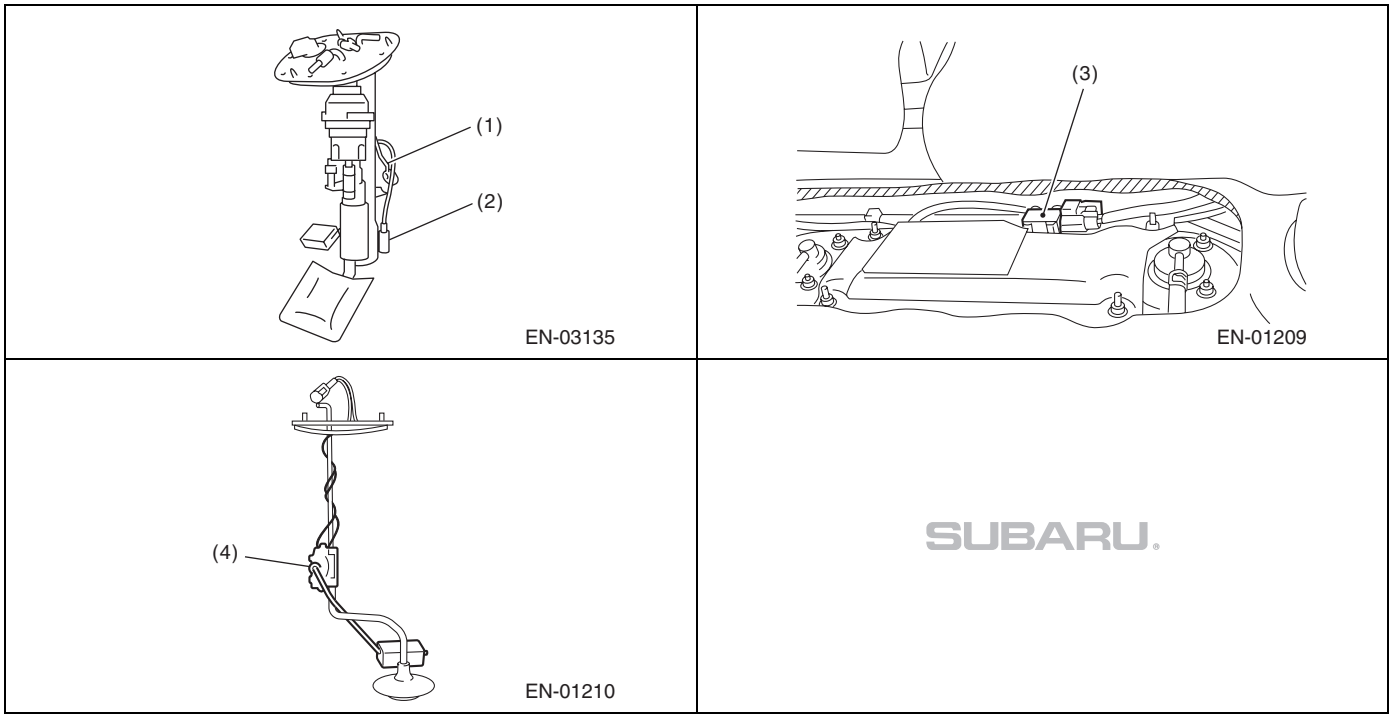

Solenoid valve, actuator, emission control system parts and ignition system parts

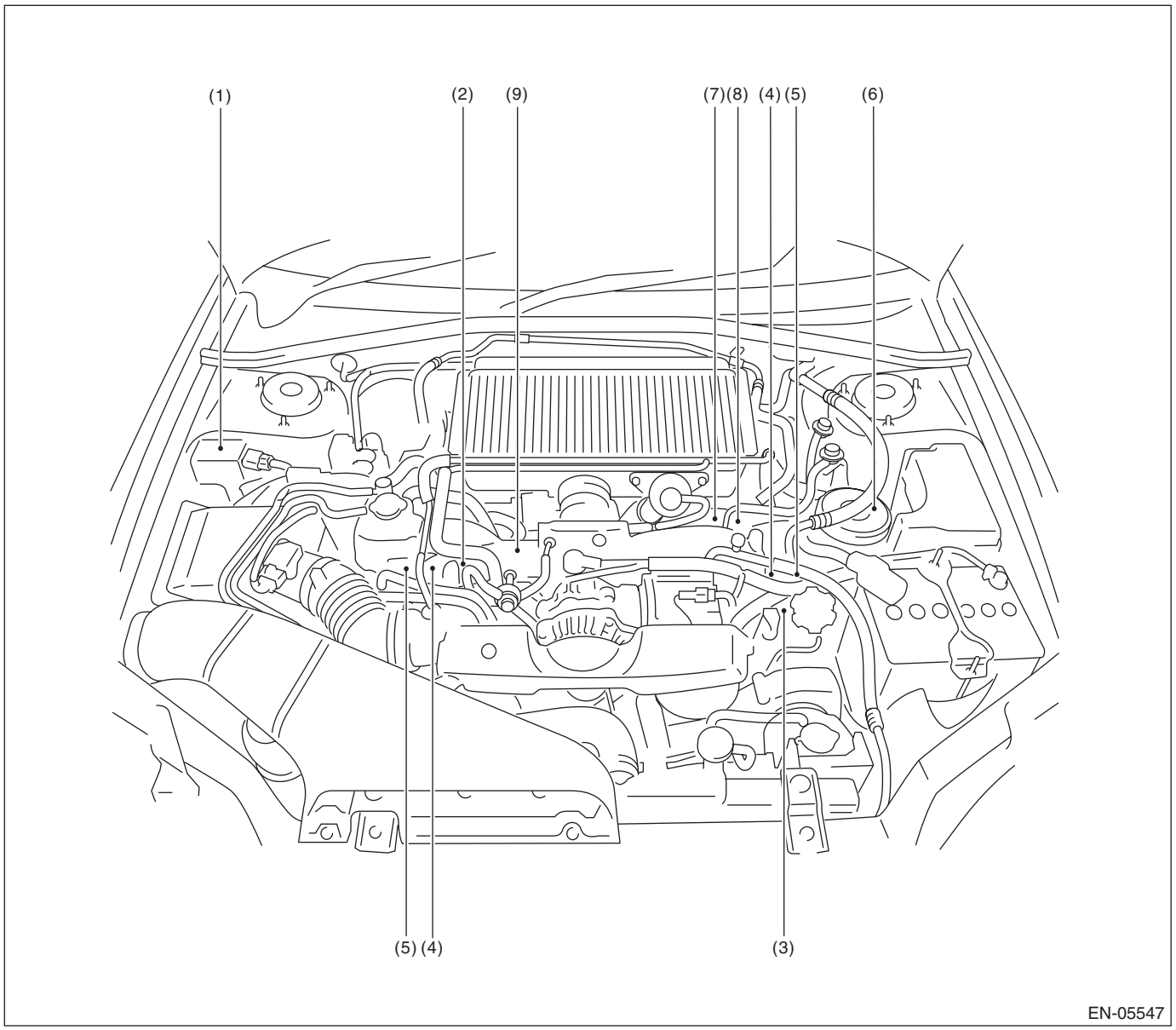

(1) Wastegate control solenoid valve
(2) Purge control solenoid valve 1
(3) Ignition coil and ignitor ASSY
(4) Tumble generator valve actuator
(5) Oil flow control solenoid valve
(6) Secondary air pump
(7) Secondary air combination valve (RH)
(8) Secondary air combination valve (LH)
(9) Purge control solenoid valve 2

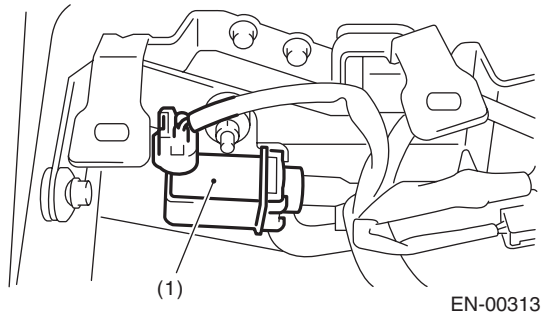

EN-00313

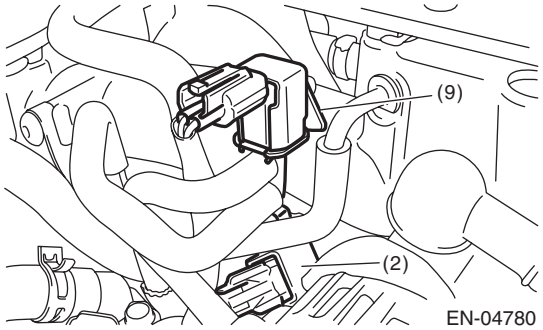

EN-04780

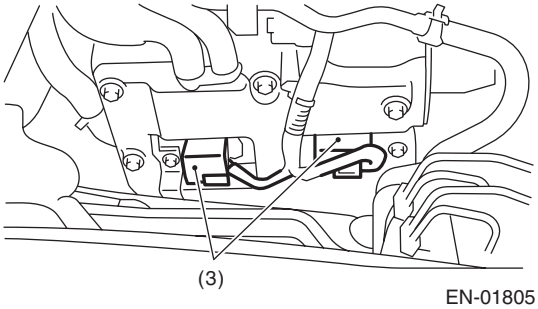

EN-01805

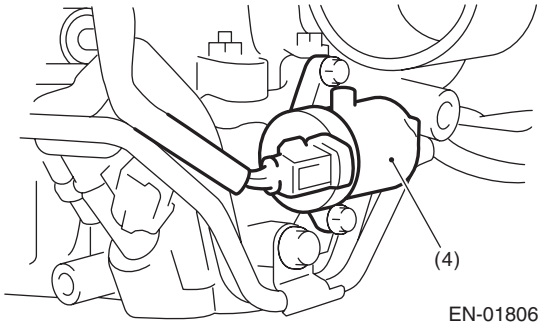

EN-01806

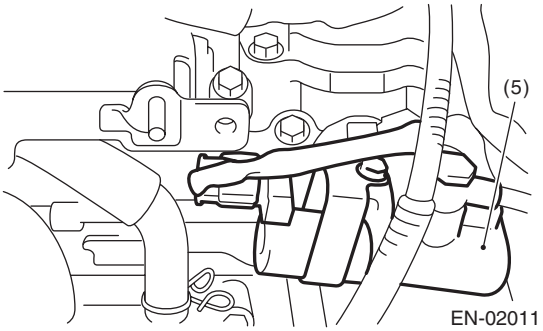

EN-02011

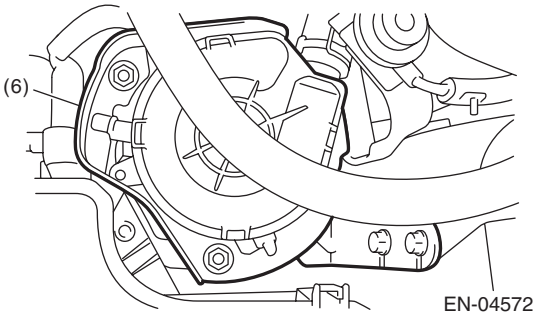

EN-04572

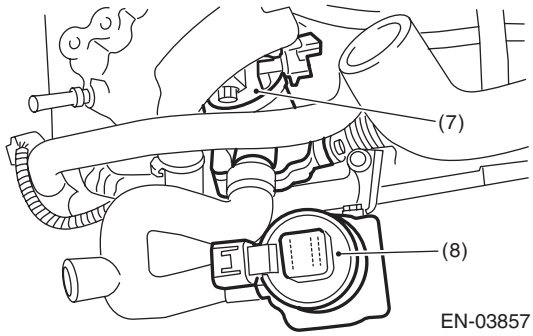

EN-03857

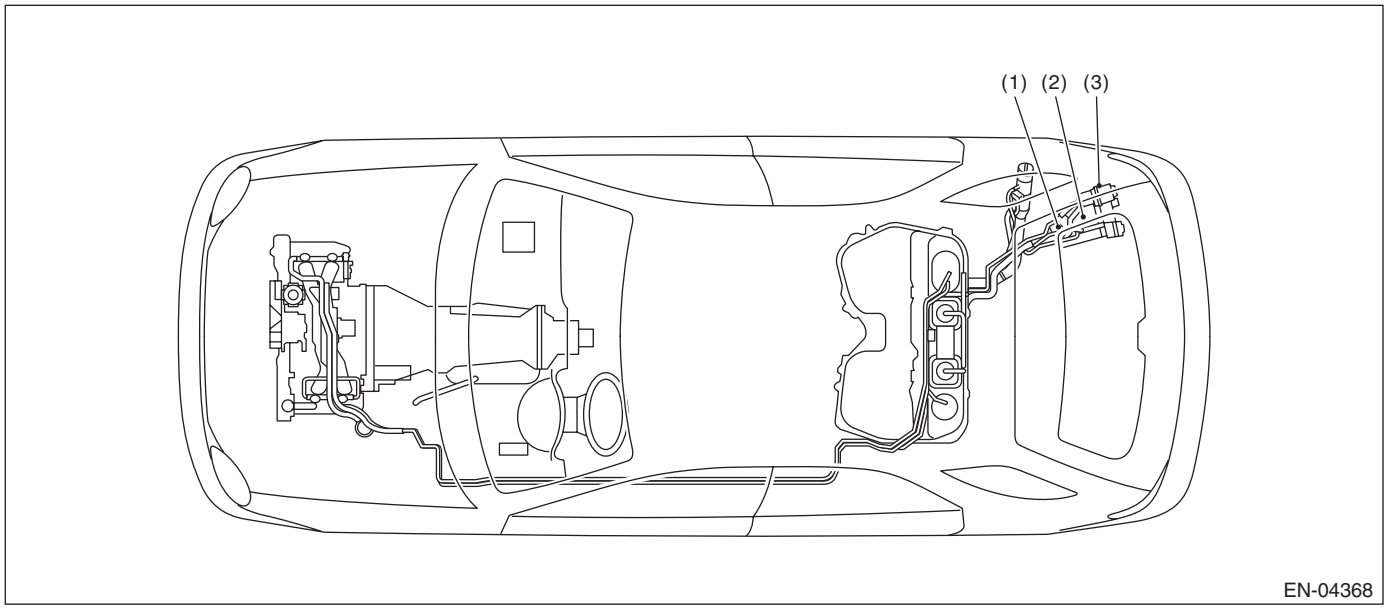

(1) Pressure control solenoid valve (2) Canister (3) Drain valve

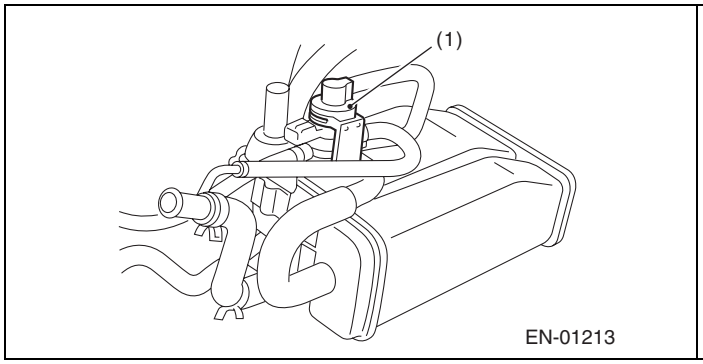

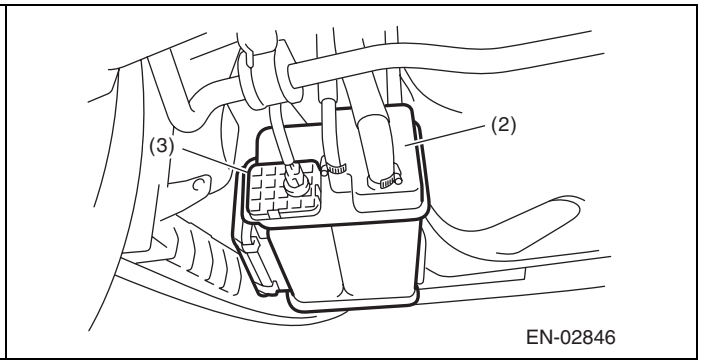

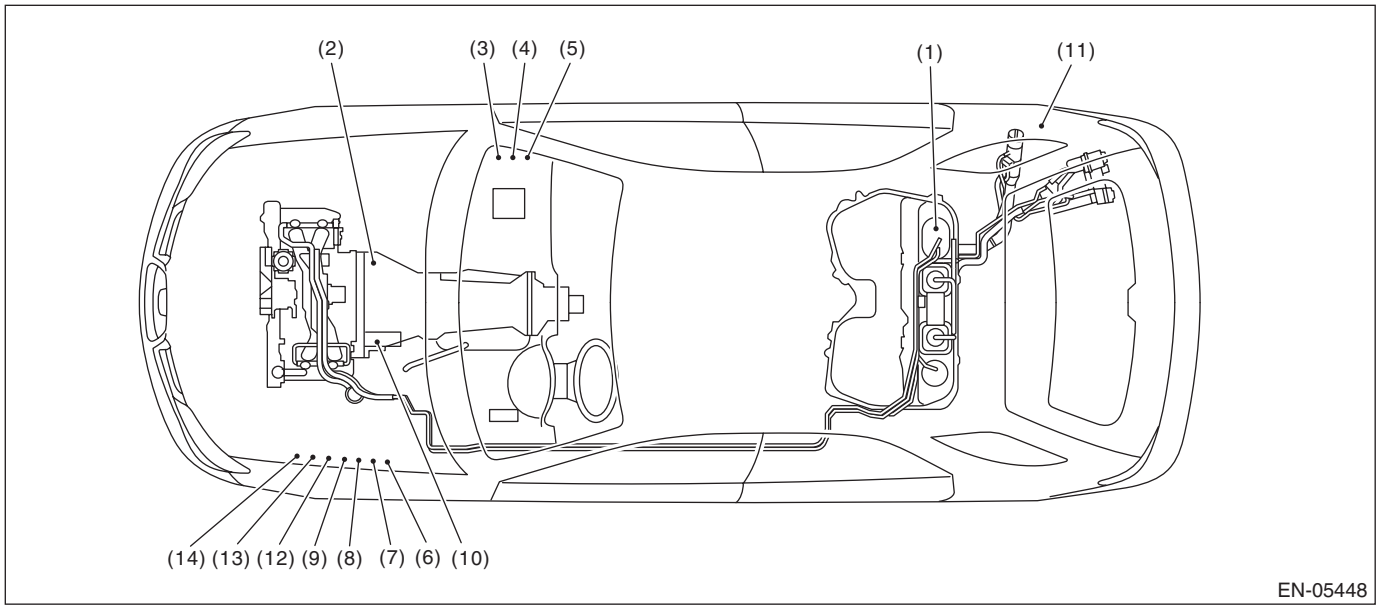

(1) Fuel pump
(2) Inhibitor switch
(3) Main relay
(4) Fuel pump relay
(5) Electronic throttle control relay
(6) Radiator main fan relay 1
(7) Radiator main fan relay 2
(8) Radiator sub fan relay 1
(9) Radiator sub fan relay 2
(10) Starter
(11) Fuel pump controller
(12) Secondary air pump relay
(13) Secondary air combination valve relay 1
(14) Secondary air combination valve relay 2

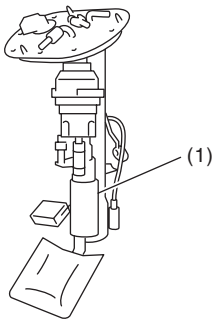
(1)
EN-03136

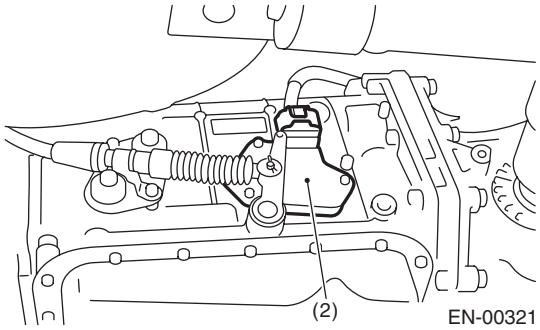
(2)
EN-00321

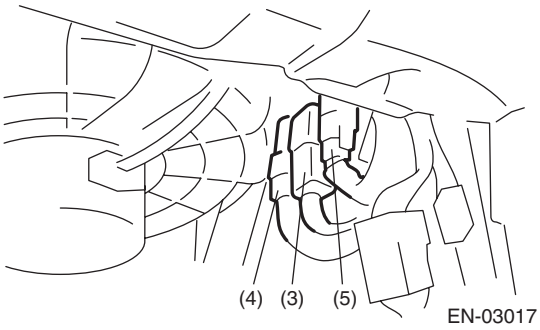
(4)
(3)
(5)
EN-03017

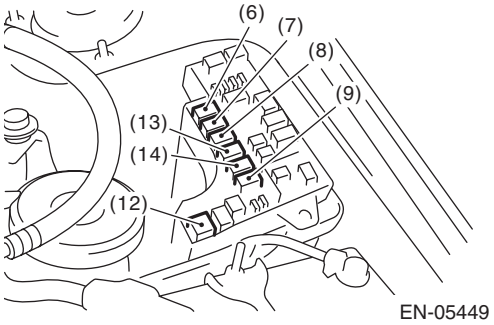
(6)
(7)
(8)
(9)
(13)
(14)
(12)
EN-05449

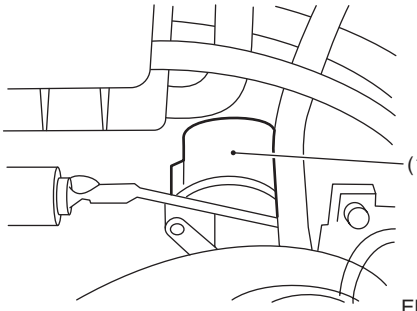
(10)
EN-01328

(11)
EN-04574

2. TRANSMISSION

Control module

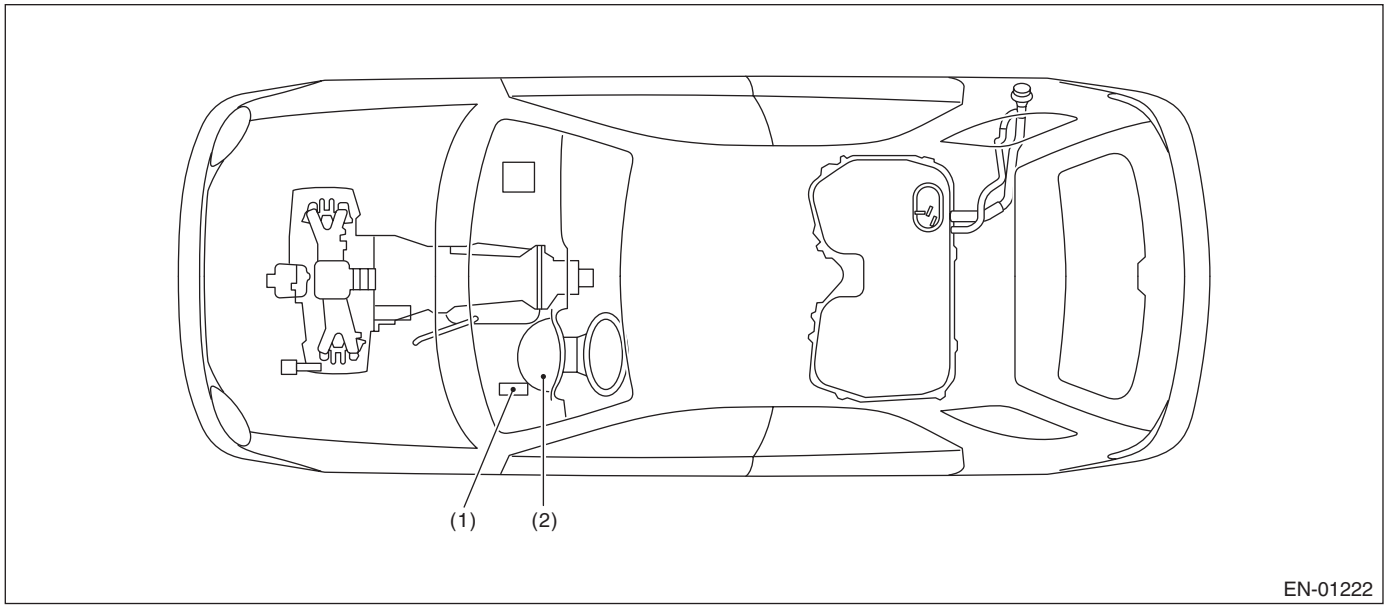

(1) Transmission control module (TCM) (AT model)

(2) AT diagnostic indicator light (AT model)

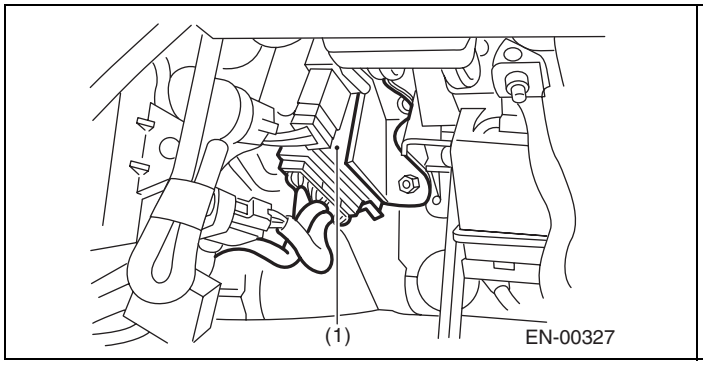

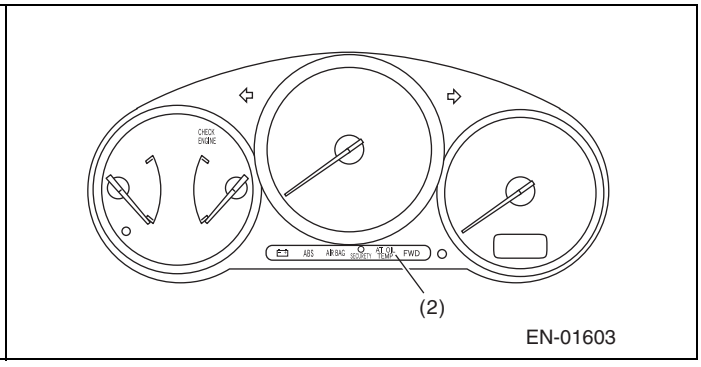

Sensor

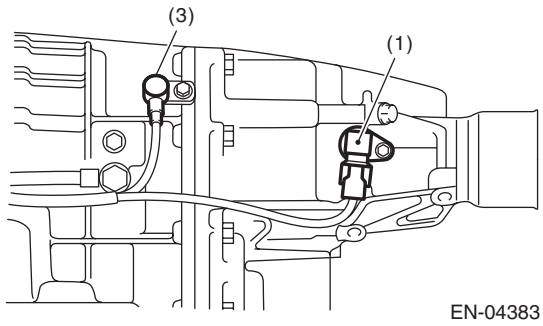

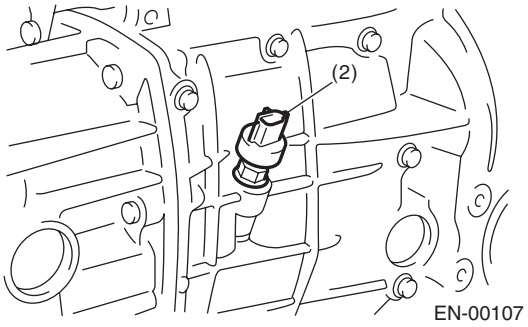

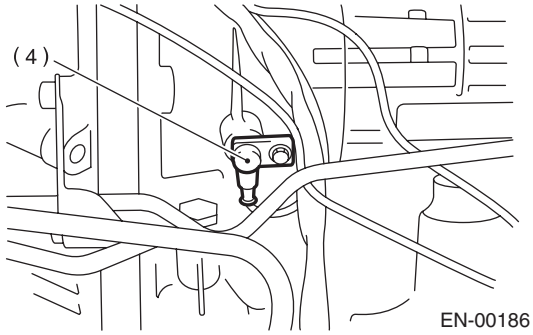

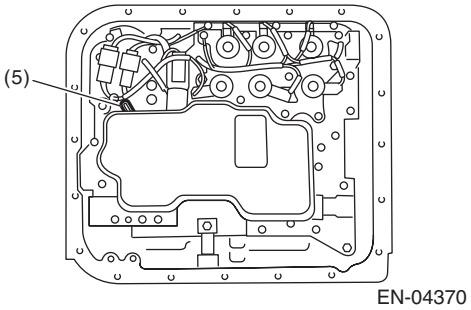

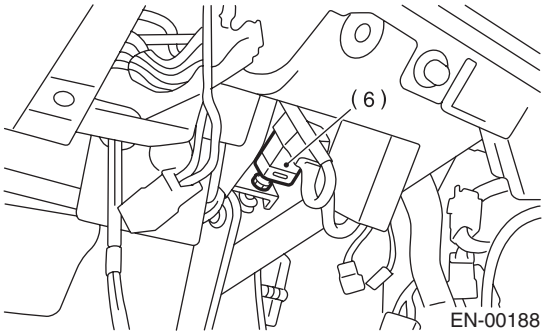

(1)	Rear vehicle speed sensor (AT model)	(3)	Front vehicle speed sensor (AT model)	(5)	ATF temperature sensor (AT model)
(2)	Front vehicle speed sensor (MT model)	(4)	Torque converter turbine speed sensor (AT model)	(6)	Brake light switch

Solenoid valve and switch (AT model)

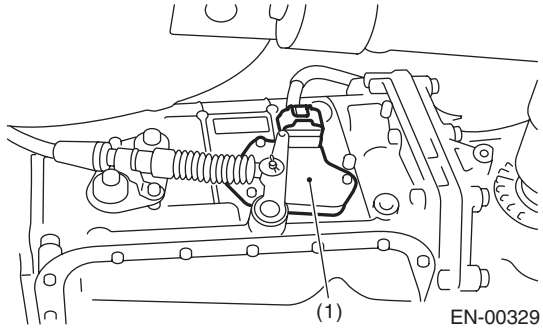

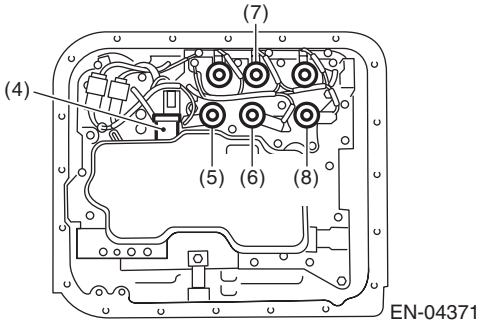

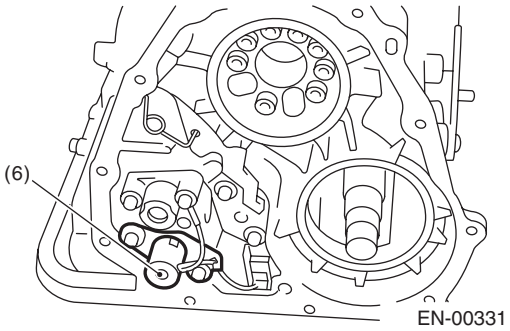

(1)	Inhibitor switch	(4)	Line pressure linear solenoid	(7)	2-4 brake duty solenoid
(2)	Shift solenoid valve 1	(5)	Lock-up duty solenoid	(8)	Low clutch timing solenoid valve
(3)	Shift solenoid valve 2	(6)	Transfer duty solenoid		

Solenoid valve and switch (MT model)

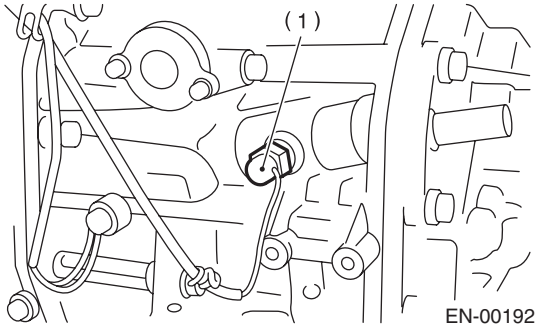

(1) Neutral position switch